Utility-Scale Liquid Cooling ESS All-in-One Product

OneBank 3.0



HIGH SAFETY & RELIABILITY

- Thermal runaway prediction & active fire prevention
- Multi-level fuse protection design
- AI intelligent arc fault real-time detection
- 24/7 real-time online insulation monitoring

HIGH EFFICIENCY

- Full-stack self-development, supporting rapid on-site deployment
- Rack-level management, improving energy generation by 8%
- AI uniform temperature control via liquid cooling, longer service life
- Multiple operation modes, including P/Q, V/f & VSG

HIGH ENERGY DENSITY

- Liquid-cooled AC/DC integrated design
- High volumetric energy density reaching 146 Wh/L
- Features compact footprint with efficient land utilization
- Industry-leading full-lifecycle LCOS

FULL-CHAIN INTELLIGENT O&M

- AI high-precision health diagnosis
- Modular design for easy maintenance
- Automatic refill without downtime
- 24/7 rapid response

SYSTEM DIAGRAM

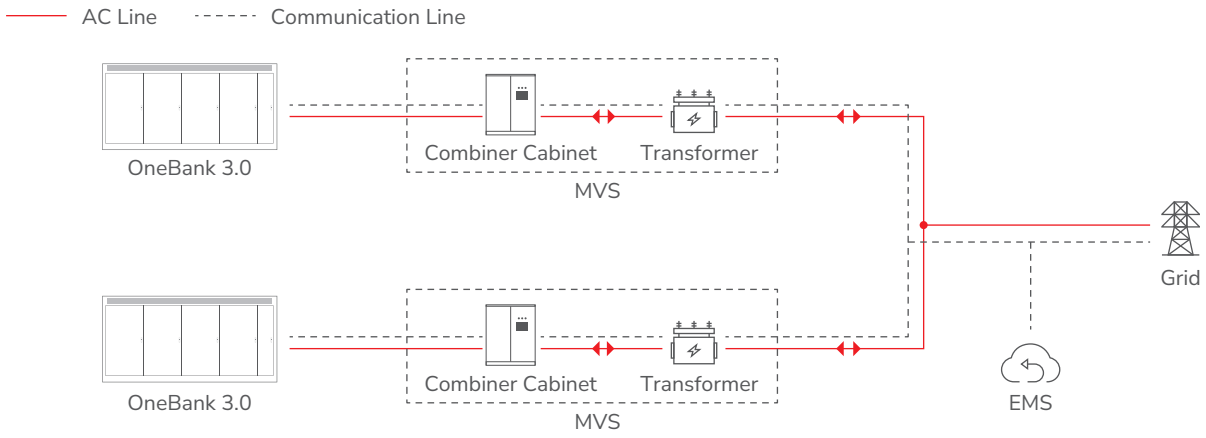

PRODUCT SPECIFICATIONS

DC Side	
Cell type	LFP
System battery configuration	416S8P
Nominal capacity	6251 kWh
Nominal voltage	1331.2 V
Operating voltage range	1164.8 ~ 1500 V
Charge-discharge rate	≤ 0.25P

AC Side	
Rated output power	430 kW × 4
Peak Output Power (10 seconds)	2580 kW
Rated grid voltage	690 V
Rated grid frequency	50 / 60 Hz
THDi	≤ 2%
Power factor range	> 0.99
PCS efficiency	99.1%

Standard & Compliance	
Standard	IEC 61000, IEC 62619, IEC 62933, IEC 63056, IEC 62477, IEC 62443, G99, UL 9540A, NFPA 68/69, UN 38.3, UN 3536, etc.

General Parameter	
Dimensions (W×D×H)	6058 mm × 2438 mm × 2896 mm
Weight	≤ 48 t
Degree of protection	IP55
Anti-corrosion degree	C4/C5 (optional)
Operation humidity range	0% ~ 100% RH
Operation temperature range	-30 ~ 60°C
Max. operating altitude	> 3000 m derating
Temperature control method	Liquid cooling
Noise	≤ 75 dB(A)
Fire suppression system	Smoke and heat detectors, FACP, Sprinkler, Fire alarm system, Flammable gas detector, Ventilation system, Aerosol fire-extinguishing system, Explosion vent panel (optional)
Communication interface	Ethernet
Communication protocol	Modbus TCP, IEC 61850, IEC 104

market@longi.com | Copyright © 2026 LONGi Energy Storage. All rights reserved. (20260731 V2.1)