Utility-Scale Liquid Cooling ESS

OneMatrix Solution

LONGiBank 3.0 / OneMatrix-3440





HIGH SAFETY & RELIABILITY

- Thermal runaway prediction & active fire prevention
- Multi-level fuse protection design
- AI intelligent arc fault real-time detection
- 24/7 real-time online insulation monitoring

HIGH EFFICIENCY

- Full-stack self-development, supporting rapid on-site deployment
- Rack-level management, improving energy generation by 8%
- AI uniform temperature control via liquid cooling, longer service life
- Multiple operation modes, including P/Q, V/f & VSG

HIGH ENERGY DENSITY

- Liquid-cooled AC/DC integrated design
- High volumetric energy density reaching 146 Wh/L
- Features compact footprint with efficient land utilization
- Industry-leading full-lifecycle LCOS

FULL-CHAIN INTELLIGENT O&M

- AI high-precision health diagnosis
- Modular design for easy maintenance
- Automatic refill without downtime
- 24/7 rapid response

SYSTEM DIAGRAM

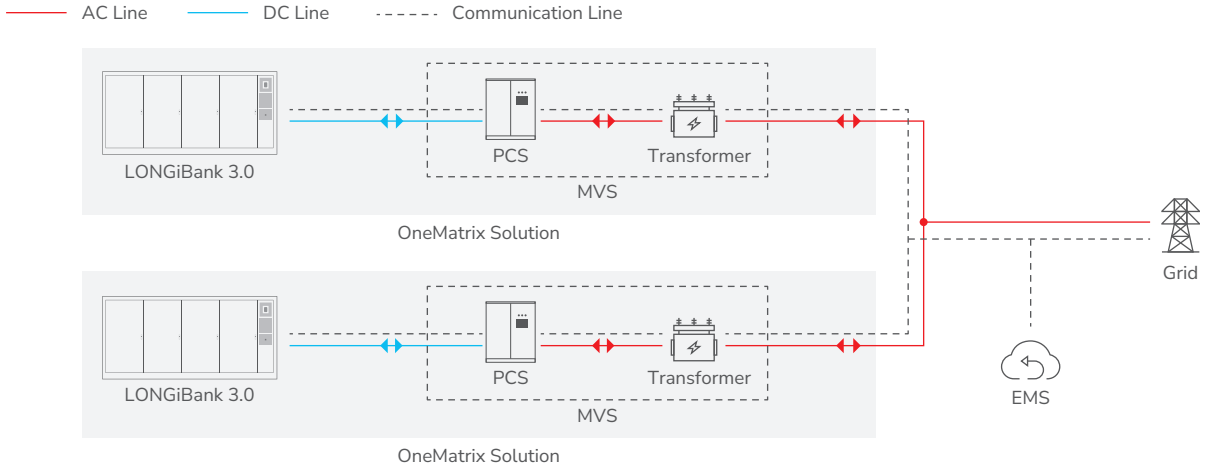

PRODUCT SPECIFICATIONS

DC Side - LONGiBank 3.0	
Cell type	LFP
System battery configuration	416S8P
Nominal capacity	6251 kWh
Nominal voltage	1331.2 V
DC voltage range	1164.8 ~ 1500 V
Number of DC outputs	Max. 16
Charge-discharge rate	≤ 0.5P
Dimensions (W×D×H)	6058 mm × 2438 mm × 2896 mm
Weight	≤ 47 t

AC Side	
Rated output power	215 kW × 16
Rated grid voltage	690 V (800 V)
Rated grid frequency	50 / 60 Hz
THDi	≤ 2%
Power factor range	> 0.99
Maximum efficiency of PCS	99.02%
Temperature control method	Liquid cooling
Grid-tied/Off-grid switching function	Supported

MV Transformer	
Transformer rated power	3440 kVA
Voltage ratio	(6~37) kV / 0.69 kV
Transformer type	Oil-immersed / Dry-type

MVS Parameter	
Dimensions (W×D×H)	6058 mm × 2438 mm × 2896 mm
Weight	≤ 18 t
Degree of protection	IP54 (PCS IP66)
Operation temperature range	-30 ~ 60°C
Operation humidity range	0 ~ 95% RH
Max.operating altitude	>3000 m derating
Communication interfaces	Ethernet, RS485, CAN
Communication protocols	ModbusTCP/RTU,
	IEC 104, IEC 61850
BMS access	Supported

Standard & Compliance	
Standard	IEC 61000, IEC 62619, IEC 62933, IEC 63056, IEC 62477, IEC 62443, G99, UL9540A, NFPA68/69, UN 38.3, UN 3536, etc.

Specifications subject to change without notice.

market@longi.com | Copyright © 2026 LONGi Energy Storage. All rights reserved. (20260731 V2.2)

Utility-Scale Liquid Cooling ESS

OneMatrix Solution

LONGiBank 3.0 / OneMatrix-6880



HIGH SAFETY & RELIABILITY

- Thermal runaway prediction & active fire prevention
- Multi-level fuse protection design
- AI intelligent arc fault real-time detection
- 24/7 real-time online insulation monitoring

HIGH EFFICIENCY

- Full-stack self-development, supporting rapid on-site deployment
- Rack-level management, improving energy generation by 8%
- AI uniform temperature control via liquid cooling, longer service life
- Multiple operation modes, including P/Q, V/f & VSG

HIGH ENERGY DENSITY

- Liquid-cooled AC/DC integrated design
- High volumetric energy density reaching 146 Wh/L
- Features compact footprint with efficient land utilization
- Industry-leading full-lifecycle LCOS

FULL-CHAIN INTELLIGENT O&M

- AI high-precision health diagnosis
- Modular design for easy maintenance
- Automatic refill without downtime
- 24/7 rapid response

SYSTEM DIAGRAM

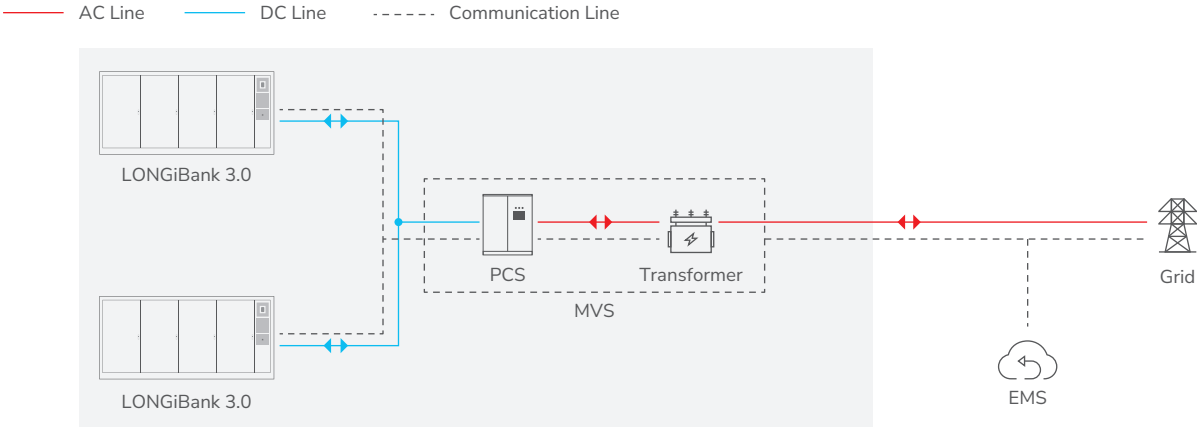

OneMatrix Solution

PRODUCT SPECIFICATIONS

DC Side - LONGiBank 3.0	
Cell type	LFP
System battery configuration	416S8P
Nominal capacity	6251 kWh
Nominal voltage	1331.2 V
DC voltage range	1164.8 ~ 1500 V
Number of DC outputs	Max. 16
Charge-discharge rate	≤ 0.5P
Dimensions (W×D×H)	6058 mm × 2438 mm × 2896 mm
Weight	≤ 47 t

AC Side	
Rated output power	215 kW × 32
Rated grid voltage	690 V (800 V)
Rated grid frequency	50 / 60 Hz
THDi	≤ 2%
Power factor range	> 0.99
Maximum efficiency of PCS	99.02%
Temperature control method	Liquid cooling
Grid-tied/Off-grid switching function	Supported

MV Transformer	
Transformer rated power	6880 kVA
Voltage ratio	(6~37) kV / 0.69 kV
Transformer type	Oil-immersed / Dry-type

MVS Parameter	
Dimensions (W×D×H)	12192 mm × 2438 mm × 2896 mm
Weight	≤ 28 t
Degree of protection	IP54 (PCS IP66)
Operation temperature range	-30 ~ 60°C
Operation humidity range	0 ~ 95% RH
Max.operating altitude	>3000 m derating
Communication interfaces	Ethernet, RS485, CAN
Communication protocols	ModbusTCP/RTU, IEC 104, IEC 61850
BMS access	Supported

Standard & Compliance	
Standard	IEC 61000, IEC 62619, IEC 62933, IEC 63056, IEC 62477, IEC 62443, G99, UL9540A, NFPA68/69, UN 38.3, UN 3536, etc.

Specifications subject to change without notice.

market@longi.com | Copyright © 2026 LONGi Energy Storage. All rights reserved. (20260731 V2.2)